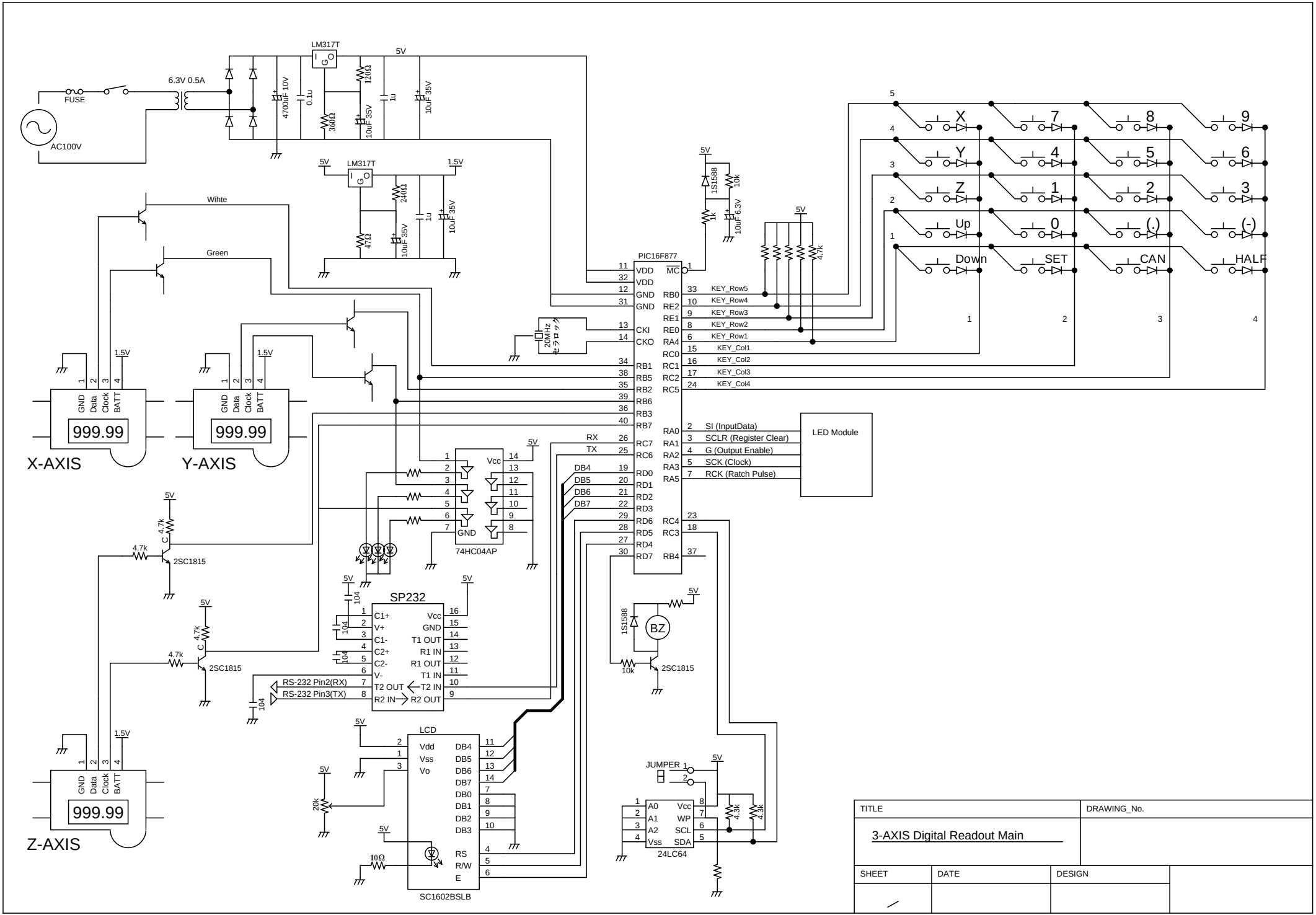
LM317T
5V
6.3V 0.5A
FUSE
AC100V
4700uF 10V
0.1u
120Ω
360Ω
10uF 35V
1u
10uF 35V
LM317T
5V
1.5V
240Ω
47Ω
10uF 35V
1u
10uF 35V
Wihte
Green
1.5V
GND
Data
Clock
BATT
999.99
X-AXIS
Y-AXIS
Z-AXIS
4.7k
2SC1815
PIC16F877
VDD
VDD
GND
GND
CKI
CKO
RB0
RB1
RB5
RB2
RB6
RB3
RB7
RC7
RC6
RD0
RD1
RD2
RD3
RD6
RD5
RD4
RD7
MC
RE2
RE1
RE0
RA4
RC0
RC1
RC2
RC5
RA0
RA1
RA2
RA3
RA5
RC4
RC3
RB4
KEY_Row5
KEY_Row4
KEY_Row3
KEY_Row2
KEY_Row1
KEY_Col1
KEY_Col2
KEY_Col3
KEY_Col4
SI (InputData)
SCLR (Register Clear)
G (Output Enable)
SCK (Clock)
RCK (Ratch Pulse)
LED Module
20MHz
RX
TX
DB4
DB5
DB6
DB7
1S1588
1k
10k
10uF 6.3V
4.7k
X
7
8
9
Y
4
5
6
Z
1
2
3
Up
0
(.)
(-)
Down
SET
CAN
HALF
74HC04AP
Vcc
GND
SP232
C1+
V+
C1-
C2+
C2-
V-
T2 OUT
R2 IN
Vcc
GND
T1 OUT
R1 IN
R1 OUT
T1 IN
T2 IN
R2 OUT
RS-232 Pin2(RX)
RS-232 Pin3(TX)
104
BZ
10k
2SC1815
LCD
Vdd
Vss
Vo
DB4
DB5
DB6
DB7
DB0
DB1
DB2
DB3
RS
R/W
E
20k
10Ω
SC1602BSLB
JUMPER
A0
A1
A2
Vss
Vcc
WP
SCL
SDA
24LC64
4.3k
TITLE
DRAWING_No.
3-AXIS Digital Readout Main
SHEET
DATE
DESIGN